P2749*, P2749N†

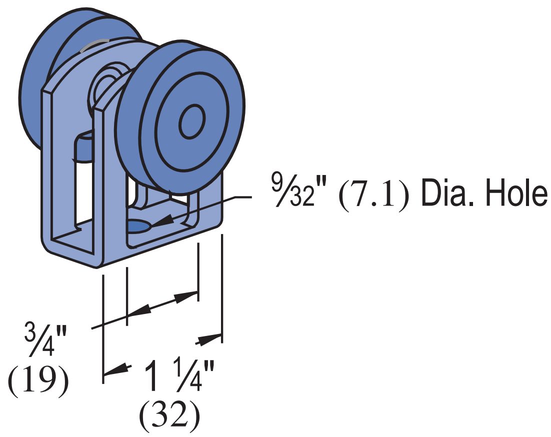

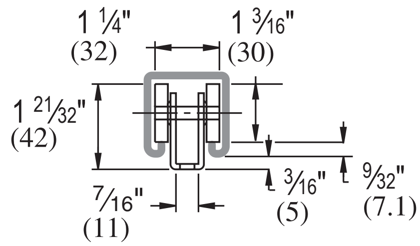

Part Number	Design Load Lbs *(kN)*	Wt/100 pcs Lbs *(kg)*
P2749	50 *.22*	21 *9.5*
P2749N	10 *.04*	13 *5.9*

Clevis Material:
12 gauge.

*Wheel bearings are stainless steel, and should not be lubricated.

† "N" indicates acetal wheels.

Standard Dimensions for $1\frac{5}{8}$" (41mm) width series channel fittings *(Unless Otherwise Shown on Drawing)*

Hole Diameter: $\frac{9}{16}$" (14mm); Hole Spacing - From End: $\frac{13}{16}$" (21mm); Hole Spacing - On Center: $1\frac{7}{8}$" (48mm); Width: $1\frac{5}{8}$"(41mm); Thickness: $\frac{1}{4}$" (6mm)

MATERIAL

Fittings, unless noted, are made from hot-rolled, pickled and oiled steel plates, strip or coil, and conform to ASTM specifications A575, A576, A635, or A36. The fitting steel also meets the physical requirements of ASTM A1011 SS GR 33. The pickling of the steel produces a smooth surface free from scale.

Many fittings are also available in stainless steel, aluminum and fiberglass. Consult factory for ordering information.

FINISHES

Fittings are available in:

- Perma-Green III (GR),
- Electro-galvanized (EG), conforming to ASTM B633 Type III SC1;
- Hot-dipped galvanized (HG), conforming to ASTM A123 or A153 and
- Plain (PL).

Project: 1~~~~~~

Architect / Engineer: 2~~~~~~

Date: 3~~~~~~~~~~ **Phone:** 4~~~~~~~~~~~~~~~~~~~~

Contractor: 5~~~~~~

Address: 6~~~~~~

Notes 1: 7~~~~~~

Notes 2: 8~~~~~~

Approval Stamp: